Operating Systems and Concurrency

Processes 3: Threads

COMP2007

Dan Marsden
(Geert De Maere)
{Geert.DeMaere,Dan.Marsden}@Nottingham.ac.uk

University Of Nottingham
United Kingdom

2025

©University of Nottingham

Recap

Last Lecture

- **Types of schedulers**: preemptive/non-preemptive, long/medium/short term)
- Performance **evaluation criteria**
- Scheduling **algorithms**: FCFS, SJF, Round Robin, Priority Queues

CPU burst time

Common question from last time

	FCFS Position	CPU burst time	Priority
Process A	1	67	1 (high)
Process B	2	37	1 (high)
Process C	3	14	2 (low)
Process D	4	16	2 (low)

Definition (CPU Burst Time)

The **CPU burst time** is the amount of time the process needs to complete execution.

Goals for Today

Overview

1. Threads vs. processes
2. Different thread implementations
3. POSIX Threads (PThreads)

Threads

Threads from an OS Perspective

- A process consists of two **fundamental units**
  - **Resources**:
    - A logical address space containing the process image (program, data, heap, stack)
    - Files, I/O devices, I/O channels, . . .
  - **Execution trace**, i.e., instructions that get run on the CPU

Threads

Threads from an OS Perspective

- A process consists of two **fundamental units**
  - **Resources**:
    - A logical address space containing the process image (program, data, heap, stack)
    - Files, I/O devices, I/O channels, . . .
  - **Execution trace**, i.e., instructions that get run on the CPU
- A process can **share its resources** between **multiple execution traces**

Threads

Threads from an OS Perspective

- A process consists of two **fundamental units**
  - **Resources**:
    - A logical address space containing the process image (program, data, heap, stack)
    - Files, I/O devices, I/O channels, . . .
  - **Execution trace**, i.e., instructions that get run on the CPU
- A process can **share its resources** between **multiple execution traces**
- Therefore it makes sense to introduce an **abstraction for an execution trace** - **threads**.

Threads

Threads from an OS Perspective

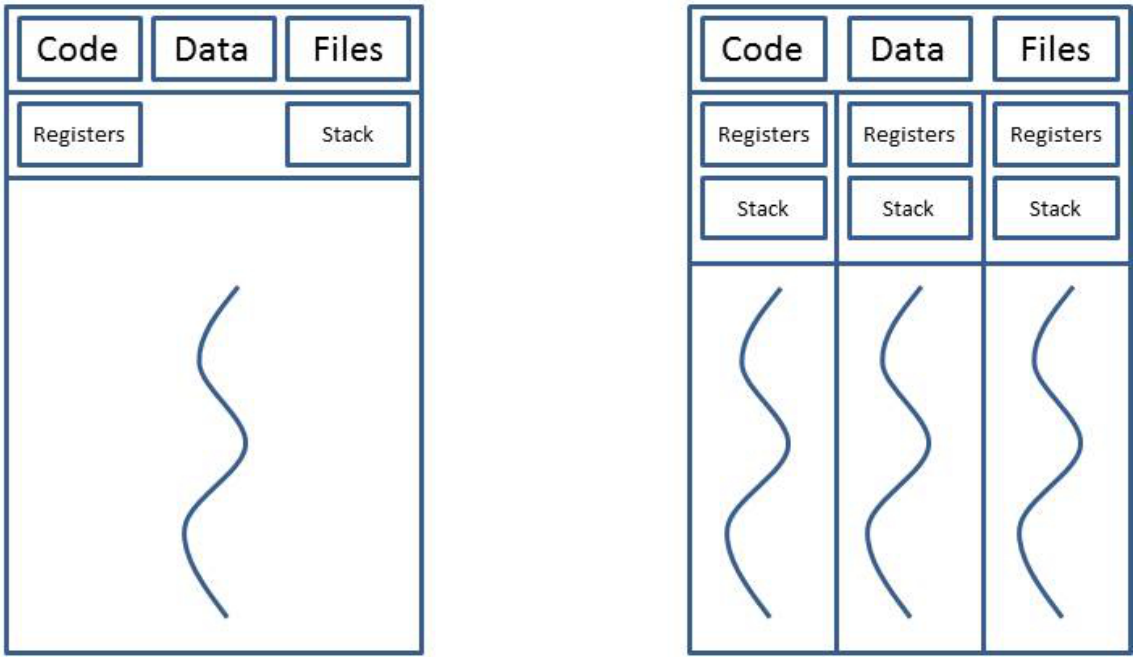

Figure: Single threaded process (left), multi-threaded process (right)

Threads

Threads from an OS Perspective

- Every thread has its own **execution context** (e.g. program counter, stack, registers)
- All threads have **access** to the process' **shared resources**
  - File handles: one thread opens a file, all threads of the same process can access the file
  - Global variables, heap memory, . . .

Threads

Threads from an OS Perspective

- Every thread has its own **execution context** (e.g. program counter, stack, registers)
- All threads have **access** to the process' **shared resources**
  - File handles: one thread opens a file, all threads of the same process can access the file
  - Global variables, heap memory, . . .
- Similar to processes, threads have:
  - **States** and **transitions** (new, running, blocked, ready, terminated)
  - A **thread control block (TCB)**
  - A **thread table** of TCBs
  - Each thread has a **thread id (TID)** (the term TID seems less common in practice than PID).

Threads

Threads from an OS Perspective

Processes	Threads
Address space	Program Counter
Global variables	Registers
Open files	Stack
Child processes	

Table: Process versus thread resources

Threads

Threads from an OS Perspective

- Threads incur **less overhead** to create/terminate/switch (address space remains the same for threads of the same process)
- Some CPUs have direct **hardware support** for **multi-threading**
  - Typically, they can offer up to 8 hardware threads per core

Threads

Threads from an OS Perspective

- **Inter-thread communication** is easier/faster than **interprocess** communication as threads share memory by default.
- **No protection boundaries** are required in the address space. Threads are assumed to be cooperating, with a common goal.
- Coordinating access to shared resources is **very complicated** - this is the topic of **synchronisation**.

Threads

Why Use Threads

- Multiple **related activities** apply to the **same resources**, these resources should be accessible/shared
- Processes will often contain multiple **blocking tasks**
  - I/O operations (thread blocks, **interrupt** marks completion)
  - Memory access: pages faults result in blocking
- Such activities should be carried out in **parallel/concurrently**
- **Application examples**: webservers, spreadsheets, word processors, anything with a user interface,. . .

Threads

OS Implementations of Threads

- **User** threads
- **Kernel** threads
- **Hybrid** implementations

User Threads

Many-to-One

- **Thread management** (creating, destroying, scheduling, thread c block manipulation) is carried out **in user space** with the help of a **user library**
- The process maintains a **thread table** managed by the **runtime system** without the **kernel's knowledge**

User Threads

Many-to-One

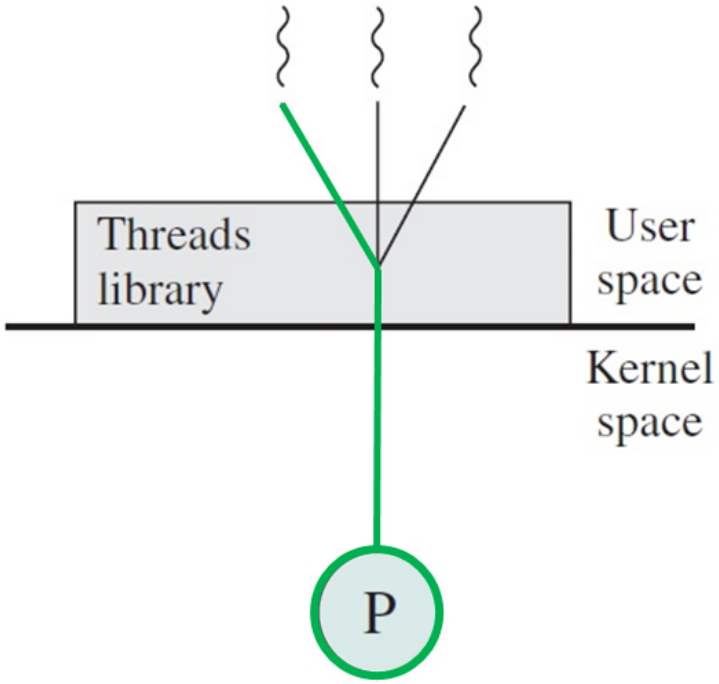

(a) Pure user-level

Figure: User threads (Stallings)

User Threads

Many-to-One

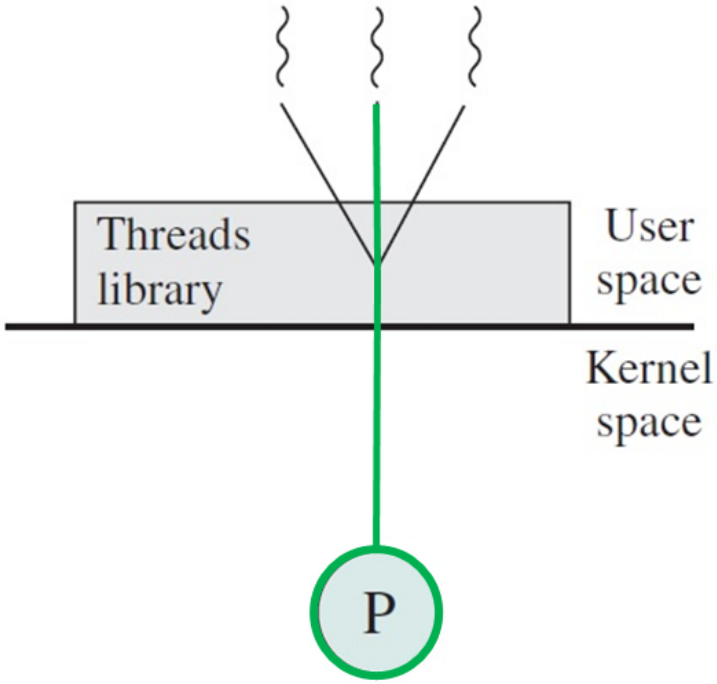

(a) Pure user-level

Figure: User threads (Stallings)

User Threads

Many-to-One

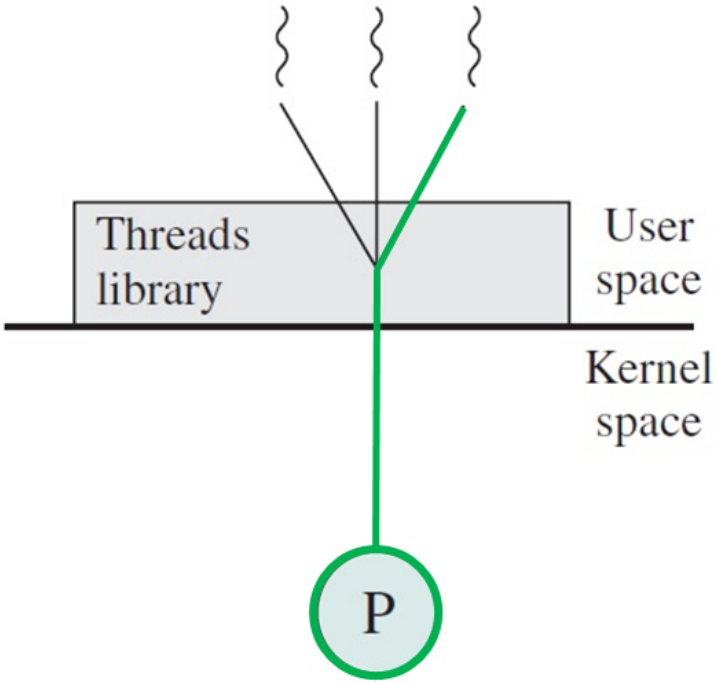

(a) Pure user-level

Figure: User threads (Stallings)

User Threads

Many-to-One

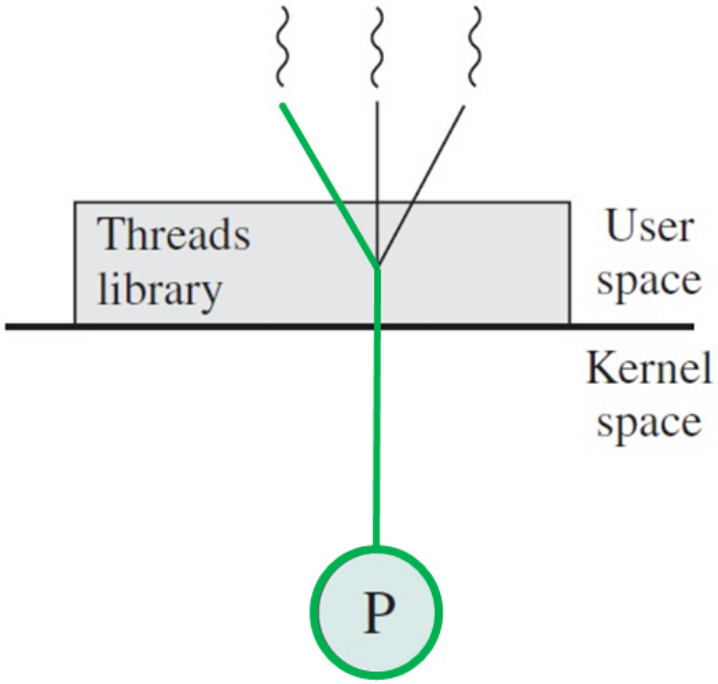

(a) Pure user-level

Figure: User threads (Stallings)

User Threads

Many-to-One

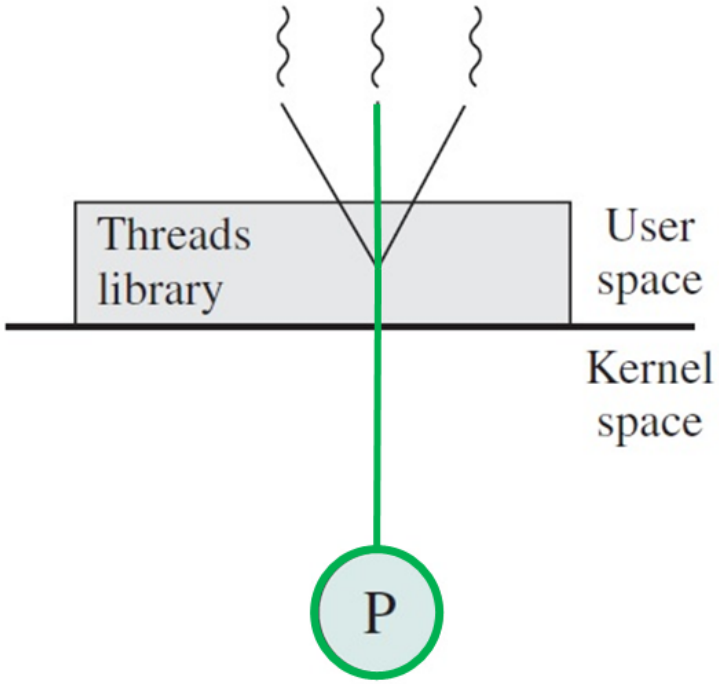

(a) Pure user-level

Figure: User threads (Stallings)

User Threads

Many-to-One

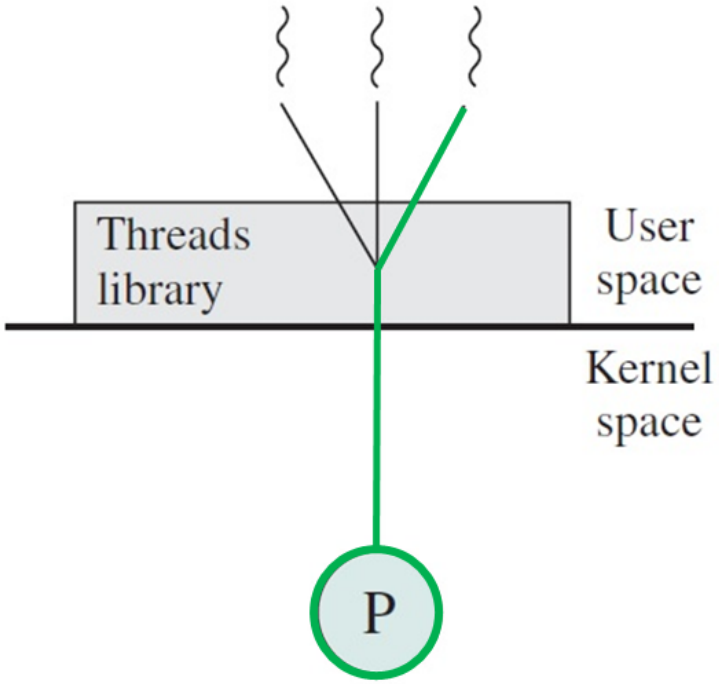

(a) Pure user-level

Figure: User threads (Stallings)

User Threads

Many-to-One

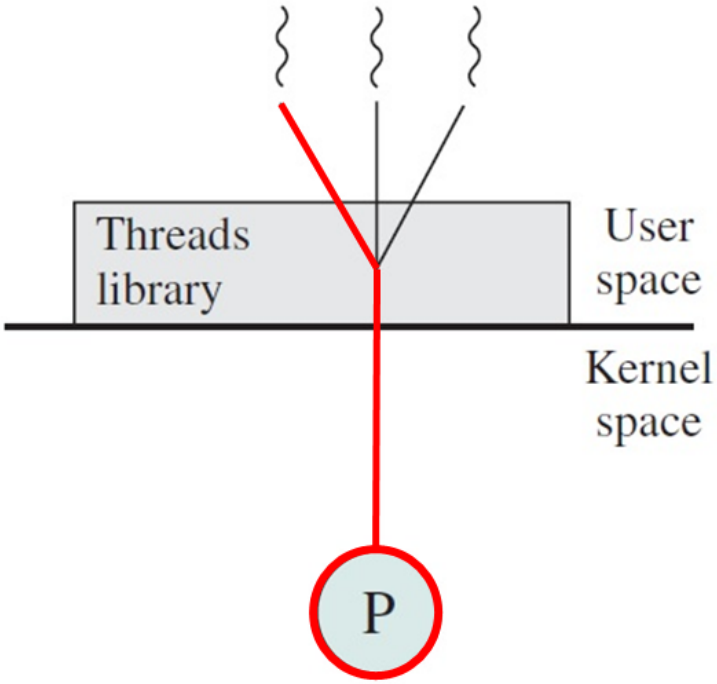

(a) Pure user-level

Figure: User threads (Stallings)

User Threads

Many-to-One

- Advantages:
  - Threads are in user space (i.e., **no mode switches** required)
  - **Full control** over the thread scheduler
  - **OS independent** (threads can run on OS that do not support them)
- Disadvantages:
  - **Blocking system calls** suspend the entire process (user threads are mapped onto a single process, managed by the kernel)
  - **No true parallelism** (a process is scheduled on a single CPU)
  - **Non-preemptive** as no mechanism such as interrupts

User Threads

Many-to-One

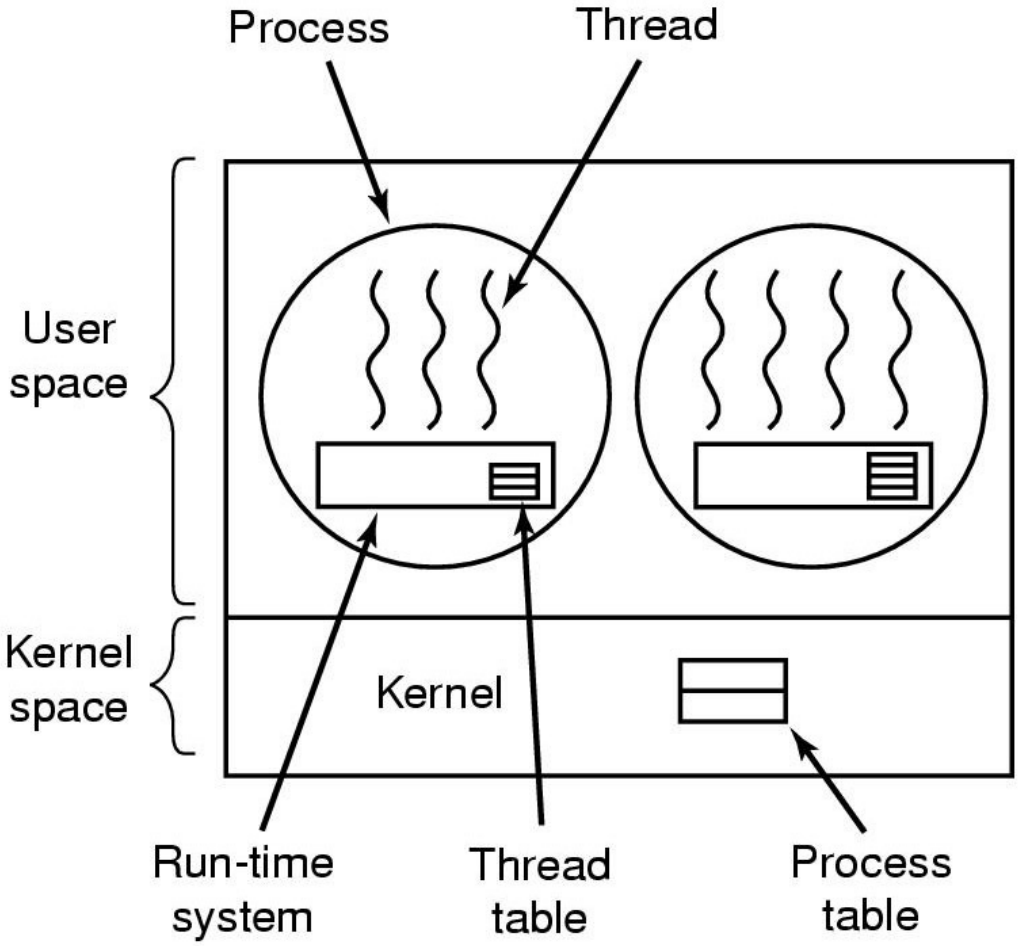

Figure: User threads (Tanenbaum 2014)

Kernel Threads

One-to-One

- The **kernel manages** the threads, user application accesses threading facilities through **API** and **system calls**
  - **Thread table** is in the kernel, containing thread control blocks (subset of process control blocks)
  - If a **thread blocks**, the kernel chooses a thread from same or different process
- Advantages:
  - **True parallelism** can be achieved
  - **Preemptive**
  - No run-time system needed in user space
- Frequent **mode switches** take place, resulting in lower performance
- Windows and Linux apply this approach

Kernel Threads

One-to-One

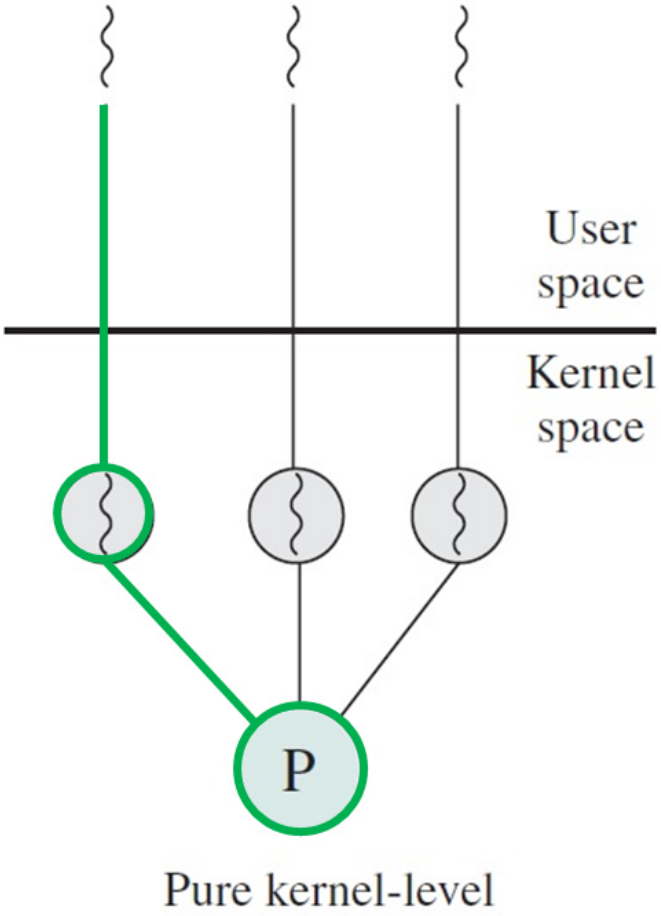

Figure: Kernel threads (Stallings 2014)

Kernel Threads

One-to-One

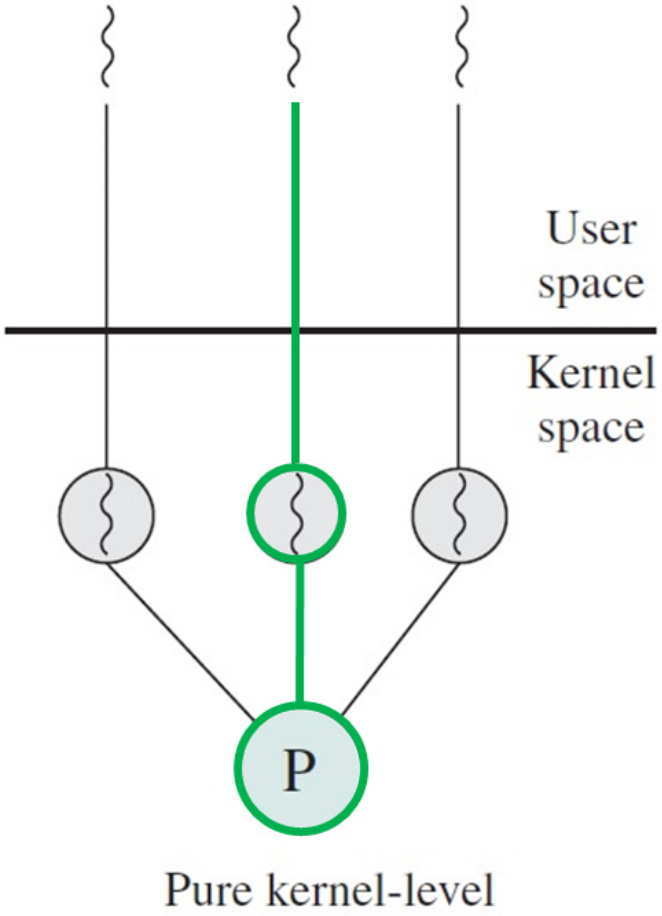

Figure: Kernel threads (Stallings 2014)

Kernel Threads

One-to-One

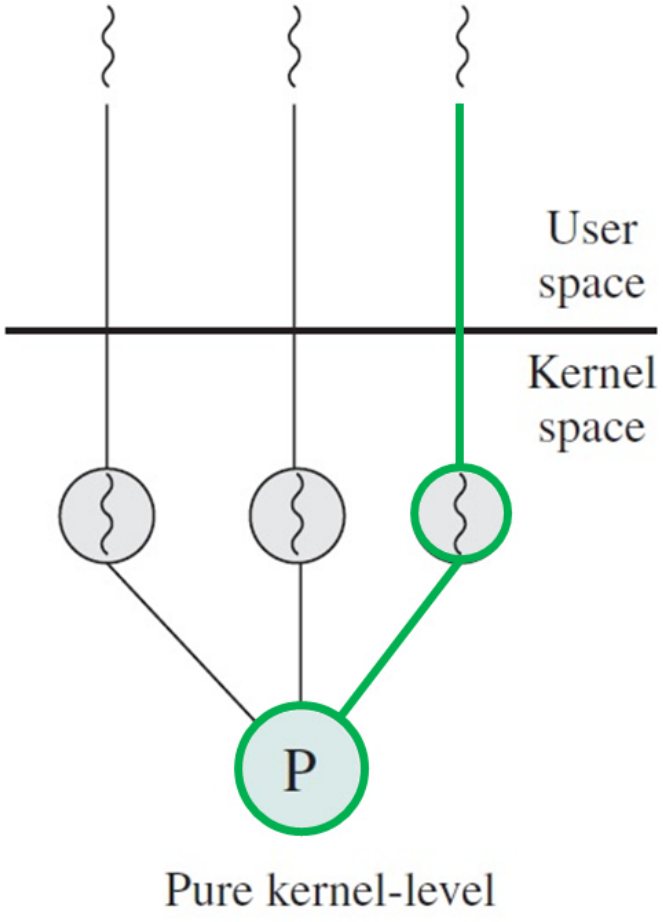

Figure: Kernel threads (Stallings 2014)

Kernel Threads

One-to-One

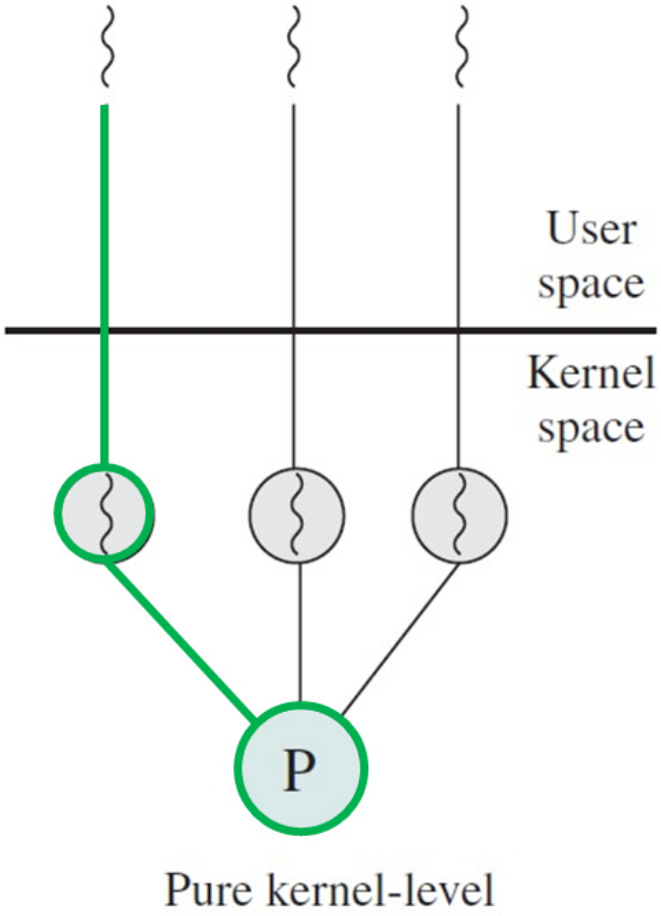

Figure: Kernel threads (Stallings 2014)

Kernel Threads

One-to-One

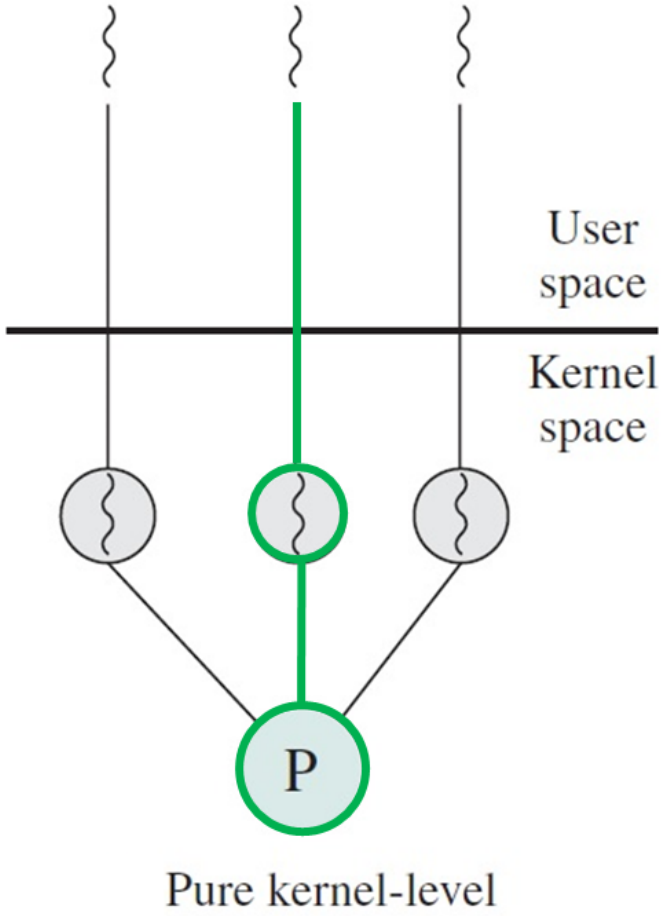

Figure: Kernel threads (Stallings 2014)

Kernel Threads

One-to-One

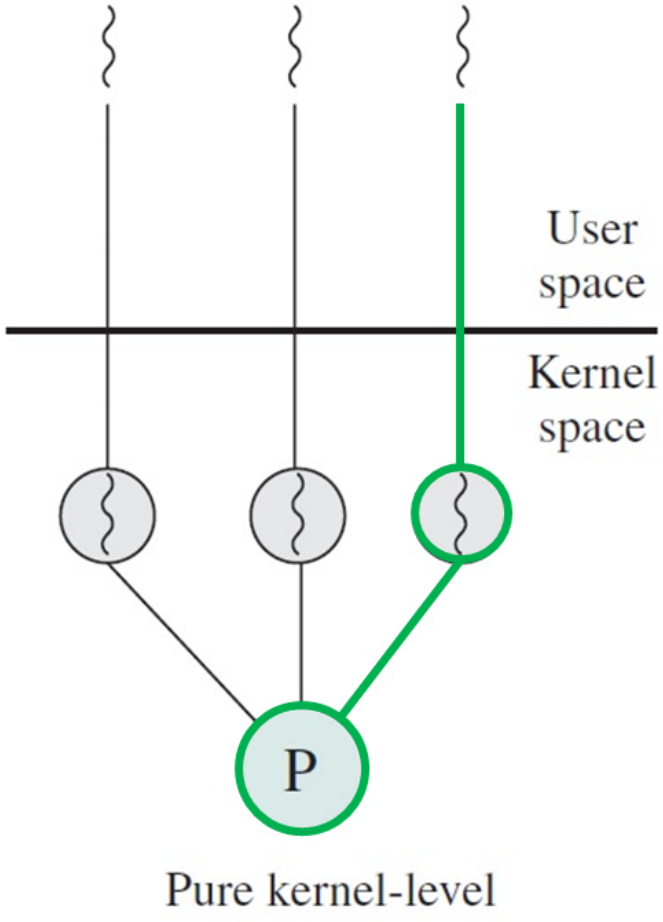

Figure: Kernel threads (Stallings 2014)

Kernel Threads

One-to-One

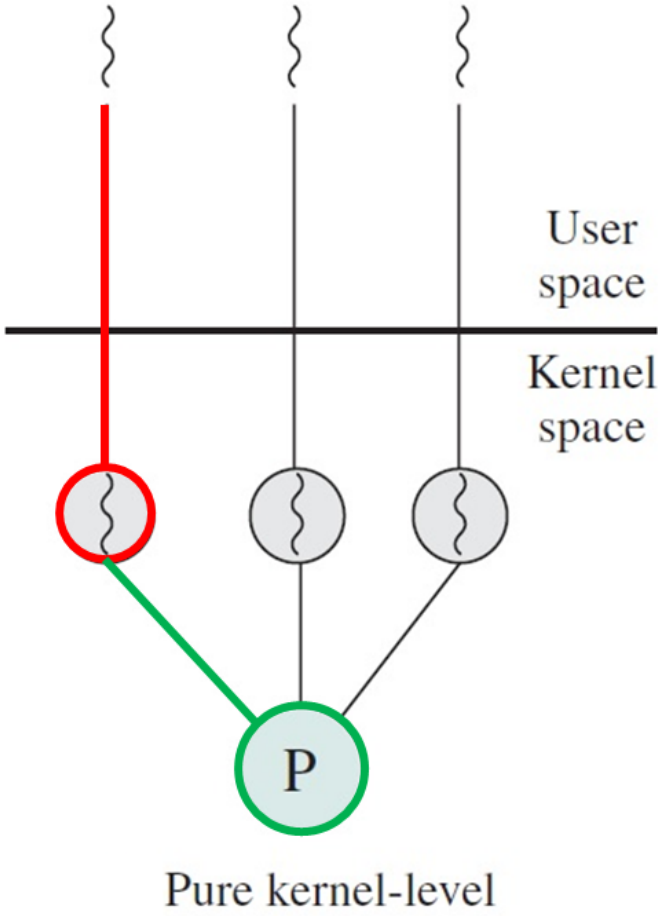

Figure: Kernel threads (Stallings 2014)

Kernel Threads

One-to-One

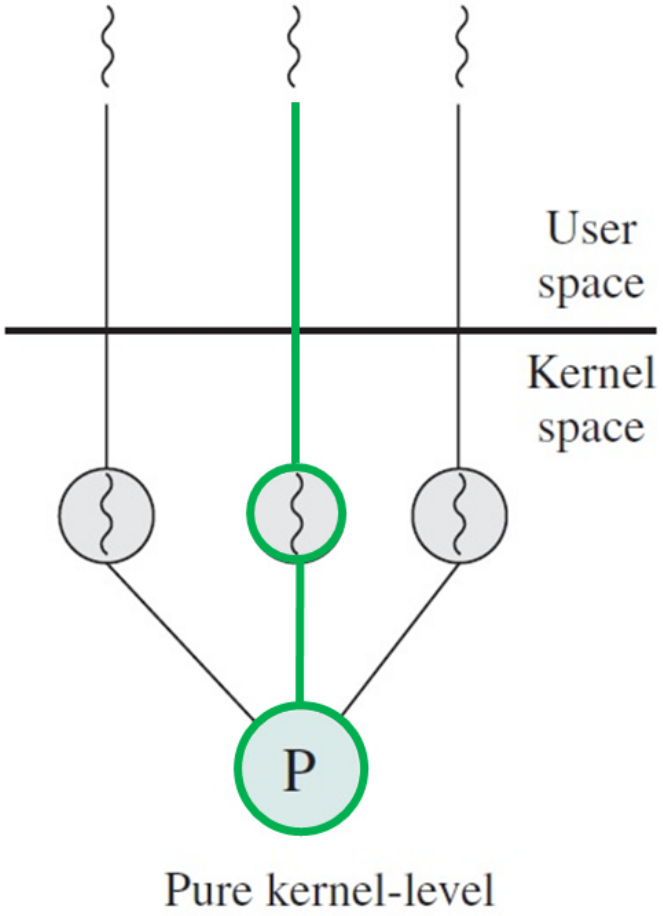

Figure: Kernel threads (Stallings 2014)

Kernel Threads

One-to-One

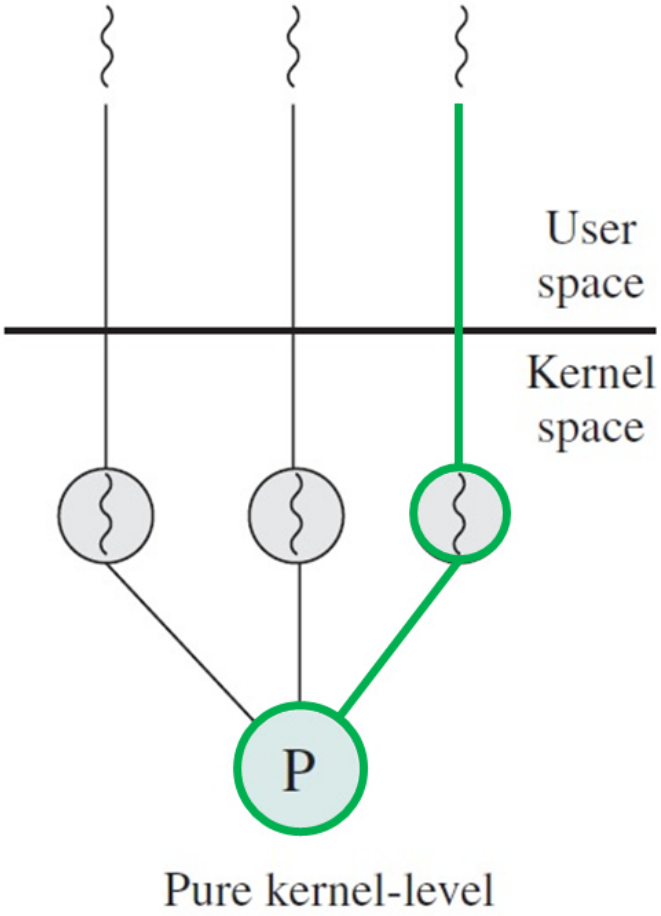

Figure: Kernel threads (Stallings 2014)

Kernel Threads

One-to-One

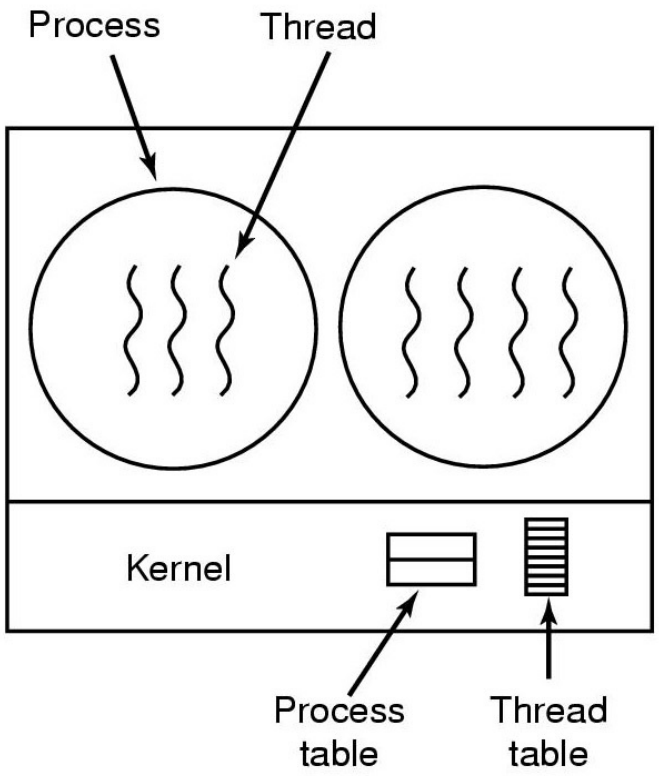

Figure: Kernel threads (Tanenbaum 2014)

Performance

User Threads vs. Kernel Threads vs. Processes

- Null fork: the overhead in creating, scheduling, running and termi null process/thread
- Signal wait: overhead in synchronising threads

Operation	User-Level Threads	Kernel-Level Threads	Processes
Null Fork	34	948	11,300
Signal Wait	37	441	1,840

Figure: Comparison, in μs (Stallings)

Hybrid Implementations

Many-to-Many

- User threads are **multiplexed** onto kernel threads
- Kernel sees and schedules the kernel threads (a limited number)
- User application sees user threads and creates/schedules these (an "unrestricted" number)

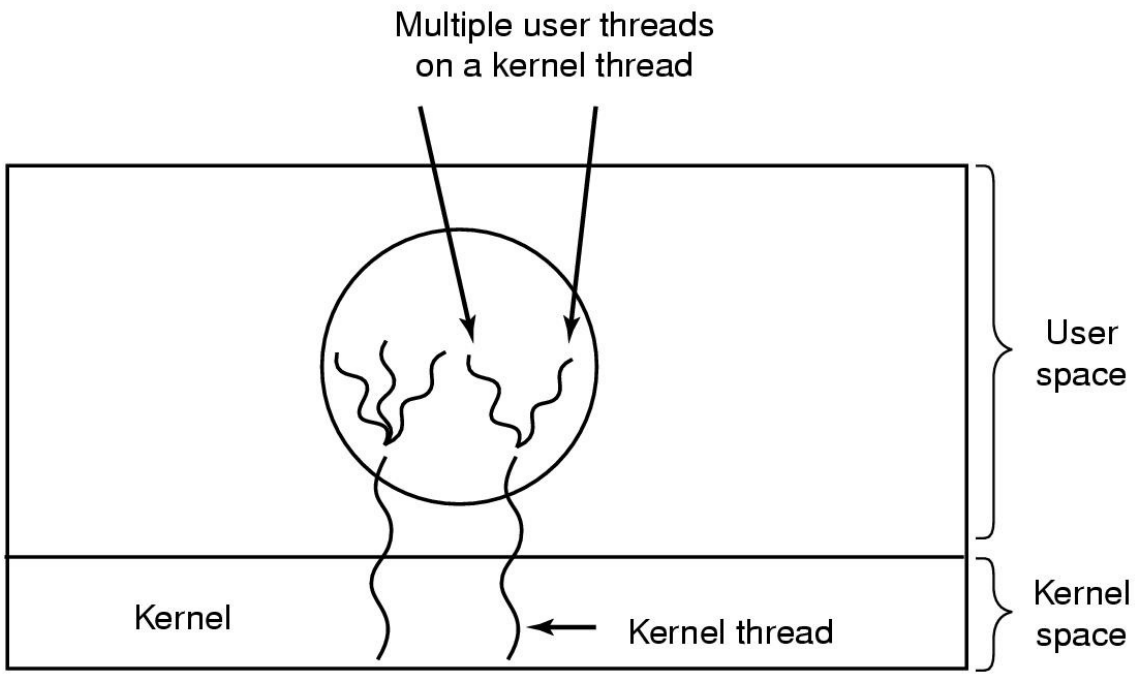

Figure: Kernel threads (Tanenbaum 2014)

Comparison

Thread Implementations

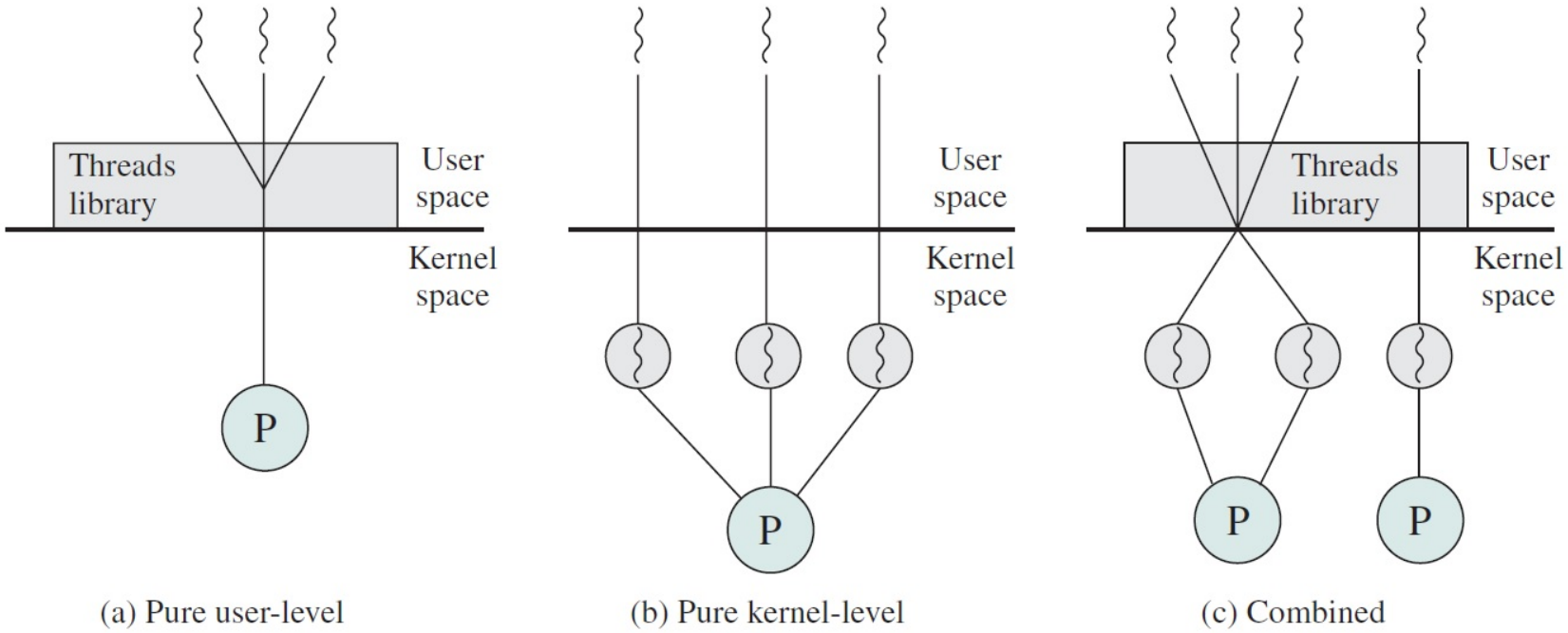

Figure: Comparison (Stallings)

Exam 2013-2014: In which situations would you favour user level threads? In which situation would you definitely favour kernel level threads?

Thread Management

Libraries

- Thread libraries provide an **API/interface for managing threads** (e.g. creating, running, destroying, synchronising, etc.)
- Thread libraries can be implemented:
  - Entirely in **user space** (i.e. user threads)
  - Based on **system calls**, i.e., rely on the kernel for thread implementations
- Examples of thread APIs include **POSIX's PThreads**, Windows Threads, and Java Threads
  - The PThread specification can be implemented as user or kernel threads

POSIX Threads

Overview

- POSIX threads are a **specification** that **"anyone" can implement**, i.e., it defines a set of APIs (function calls, over 60 of them) and what they do
- Core thread management functions we shall use include:

Function Call	Summary
`pthread_create`	Create new thread
`pthread_exit`	Exit existing thread
`pthread_join`	Wait for thread with ID

Table: PThread examples

- More detailed descriptions can be found using `man function_name` on the command line

POSIX Threads

Example

```
#include <pthread.h>
#include <stdio.h>
#define THREADS 10

void* hello(void* arg) {
  printf("Hello from thread %d\n", *((int*)arg));
  return 0;
}

int main() {
  int args[THREADS] = { 0 };
  pthread_t threads[THREADS];
  for(int i = 0; i < THREADS; i++) {
    args[i] = i;
    if(pthread_create(threads + i, NULL, hello, args + i)) {
      printf("Creating thread %d failed\n", i); return -1;
    }
  }
  for(int i = 0; i < THREADS; i++)
    pthread_join(threads[i], NULL);
}
```

POSIX Threads

Example

```
#include <pthread.h>
#include <stdio.h>
#define THREADS 10

void* hello(void* arg) {
  printf("Hello from thread %d\n", *((int*)arg));
  return 0;
}

int main() {
  int args[THREADS] = { 0 };
  pthread_t threads[THREADS];
  for(int i = 0; i < THREADS; i++) {
    args[i] = i;
    if(pthread_create(threads + i, NULL, hello, args + i)) {
      printf("Creating thread %d failed\n", i); return -1;
    }
  }
  for(int i = 0; i < THREADS; i++)
    pthread_join(threads[i], NULL);
}
```

POSIX Threads

Example

```c
#include <pthread.h>
#include <stdio.h>
#define THREADS 10

void* hello(void* arg) {
  printf("Hello from thread %d\n", *((int*)arg));
  return 0;
}

int main() {
  int args[THREADS] = { 0 };
  pthread_t threads[THREADS];
  for(int i = 0; i < THREADS; i++) {
    args[i] = i;
    if(pthread_create(threads + i, NULL, hello, args + i)) {
      printf("Creating thread %d failed\n", i); return -1;
    }
  }
  for(int i = 0; i < THREADS; i++)
    pthread_join(threads[i], NULL);
}
```

POSIX Threads

Example

```c
#include <pthread.h>
#include <stdio.h>
#define THREADS 10

void* hello(void* arg) {
  printf("Hello from thread %d\n", *((int*)arg));
  return 0;
}

int main() {
  int args[THREADS] = { 0 };
  pthread_t threads[THREADS];
  for(int i = 0; i < THREADS; i++) {
    args[i] = i;
    if(pthread_create(threads + i, NULL, hello, args + i)) {
      printf("Creating thread %d failed\n", i); return -1;
    }
  }
  for(int i = 0; i < THREADS; i++)
    pthread_join(threads[i], NULL);
}
```

POSIX Threads

Example

```
#include <pthread.h>
#include <stdio.h>
#define THREADS 10

void* hello(void* arg) {
  printf("Hello from thread %d\n", *((int*)arg));
  return 0;
}

int main() {
  int args[THREADS] = { 0 };
  pthread_t threads[THREADS];
  for(int i = 0; i < THREADS; i++) {
    args[i] = i;
    if(pthread_create(threads + i, NULL, hello, args + i)) {
      printf("Creating thread %d failed\n", i); return -1;
    }
  }
  for(int i = 0; i < THREADS; i++)
    pthread_join(threads[i], NULL);
}
```

POSIX Threads

Example

```
#include <pthread.h>
#include <stdio.h>
#define THREADS 10

void* hello(void* arg) {
  printf("Hello from thread %d\n", *((int*)arg));
  return 0;
}

int main() {
  int args[THREADS] = { 0 };
  pthread_t threads[THREADS];
  for(int i = 0; i < THREADS; i++) {
    args[i] = i;
    if(pthread_create(threads + i, NULL, hello, args + i)) {
      printf("Creating thread %d failed\n", i); return -1;
    }
  }
  for(int i = 0; i < THREADS; i++)
    pthread_join(threads[i], NULL);
}
```

POSIX Threads

Example

```
#include <pthread.h>
#include <stdio.h>
#define THREADS 10

void* hello(void* arg) {
  printf("Hello from thread %d\n", *((int*)arg));
  return 0;
}

int main() {
  int args[THREADS] = { 0 };
  pthread_t threads[THREADS];
  for(int i = 0; i < THREADS; i++) {
    args[i] = i;
    if(pthread_create(threads + i, NULL, hello, args + i)) {
      printf("Creating thread %d failed\n", i); return -1;
    }
  }
  for(int i = 0; i < THREADS; i++)
    pthread_join(threads[i], NULL);
}
```

POSIX Threads

Example

```c
#include <pthread.h>
#include <stdio.h>
#define THREADS 10

void* hello(void* arg) {
  printf("Hello from thread %d\n", *((int*)arg));
  return 0;
}

int main() {
  int args[THREADS] = { 0 };
  pthread_t threads[THREADS];
  for(int i = 0; i < THREADS; i++) {
    args[i] = i;
    if(pthread_create(threads + i, NULL, hello, args + i)) {
      printf("Creating thread %d failed\n", i); return -1;
    }
  }
  for(int i = 0; i < THREADS; i++)
    pthread_join(threads[i], NULL);
}
```

POSIX Threads

Example

```c
#include <pthread.h>
#include <stdio.h>
#define THREADS 10

void* hello(void* arg) {
  printf("Hello from thread %d\n", *((int*)arg));
  return 0;
}

int main() {
  int args[THREADS] = { 0 };
  pthread_t threads[THREADS];
  for(int i = 0; i < THREADS; i++) {
    args[i] = i;
    if(pthread_create(threads + i, NULL, hello, args + i)) {
      printf("Creating thread %d failed\n", i); return -1;
    }
  }
  for(int i = 0; i < THREADS; i++)
    pthread_join(threads[i], NULL);
}
```

POSIX Threads

Example

```c
#include <pthread.h>
#include <stdio.h>
#define THREADS 10

void* hello(void* arg) {
  printf("Hello from thread %d\n", *((int*)arg));
  return 0;
}

int main() {
  int args[THREADS] = { 0 };
  pthread_t threads[THREADS];
  for(int i = 0; i < THREADS; i++) {
    args[i] = i;
    if(pthread_create(threads + i, NULL, hello, args + i)) {
      printf("Creating thread %d failed\n", i); return -1;
    }
  }
  for(int i = 0; i < THREADS; i++)
    pthread_join(threads[i], NULL);
}
```

POSIX Threads

Example

```c
#include <pthread.h>
#include <stdio.h>
#define THREADS 10

void* hello(void* arg) {
  printf("Hello from thread %d\n", *((int*)arg));
  return 0;
}

int main() {
  int args[THREADS] = { 0 };
  pthread_t threads[THREADS];
  for(int i = 0; i < THREADS; i++) {
    args[i] = i;
    if(pthread_create(threads + i, NULL, hello, args + i)) {
      printf("Creating thread %d failed\n", i); return -1;
    }
  }
  for(int i = 0; i < THREADS; i++)
    pthread_join(threads[i], NULL);
}
```

Test your understanding

- If the threads in a process share the same memory, why do they have independent stacks?
- Is it always necessary to call `pthread_exit` when ending a thread?
- What is the minimum number of threads a process can have?
- Can user threads make good use of concurrent hardware?